PUBLISHED: 19-MAR-2017
2022.0 DEFENDER (LE), 307-02

TRANSMISSION/TRANSAXLE COOLING - VEHICLES WITH: 8HP70 8-SPEED AUTOMATIC TRANSMISSION AWD

TRANSMISSION FLUID COOLER TUBES - TDV6 3.0L DIESEL (G2009408)

REMOVAL AND INSTALLATION

44.24.15	HOSES /PIPES - OIL/FLUID COOLER - SET - RENEW	3000 CC, TDV6	2.4	USED WITHINS	

PART(S)

STEP	PART NAME	QUANTITY
Installation Step 2	Transmission casing O-ring seals	1

REMOVAL

CAUTION:

Before disconnecting any components, make sure the area is clean and free from foreign material. When disconnected all openings must be sealed.

transmissionmanuals.com

NOTE:

- Removal steps in this procedure may contain installation details.
- Some variation in the illustrations may occur, but the essential information is always correct.
- Some components shown removed for clarity.

1. Disconnect the battery ground cable.
   Refer to: Specifications (414-00 Battery and Charging System - General Information, Specifications).

2. **WARNING:**

   Make sure to support the vehicle with axle stands.

   Raise and support the vehicle.

3. Remove the front driveshaft.
   Refer to: Front Driveshaft - TDV6 3.0L Diesel (205-01 Driveshaft, Removal and Installation).

transmissionmanuals.com

4.

WARNING:

Be prepared to collect escaping fluids.

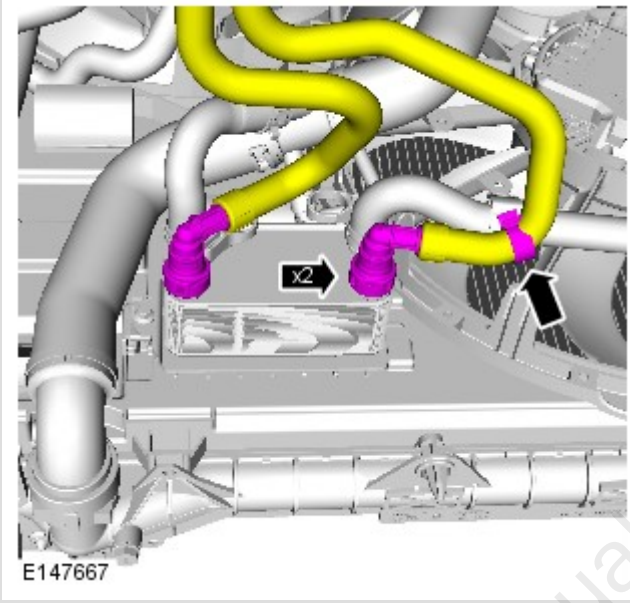

5.

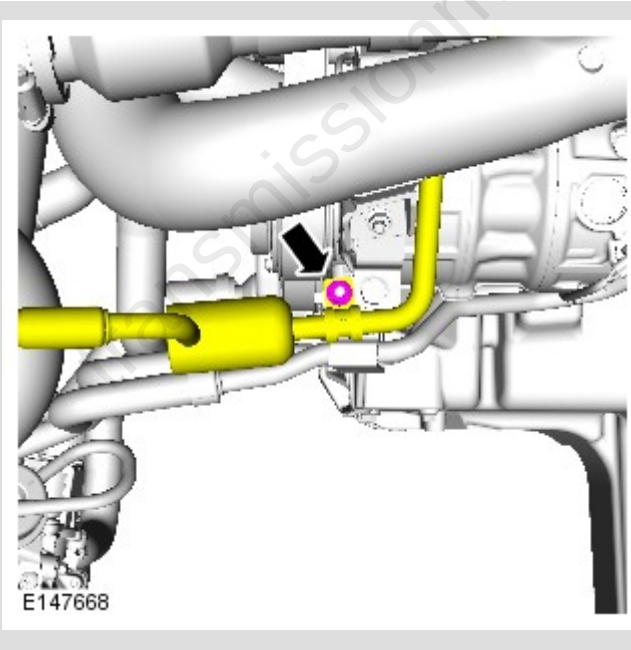

transmissionmanuals.com

6.

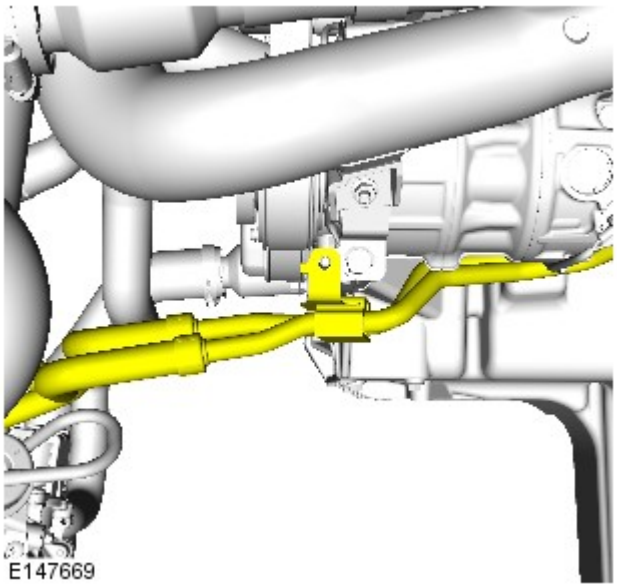

7.

CAUTION:

Be prepared to collect escaping fluids.

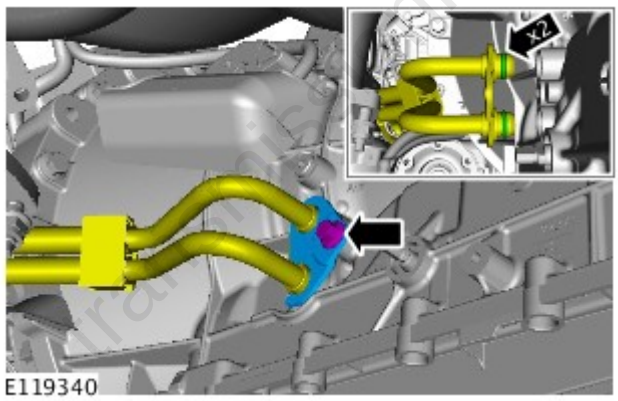

www.mitsubishimanuals.com

8.

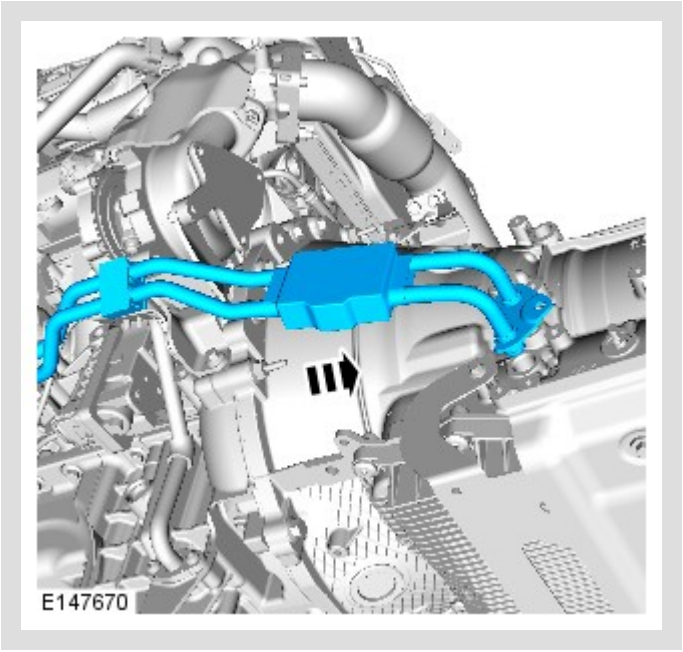

INSTALLATION

1.

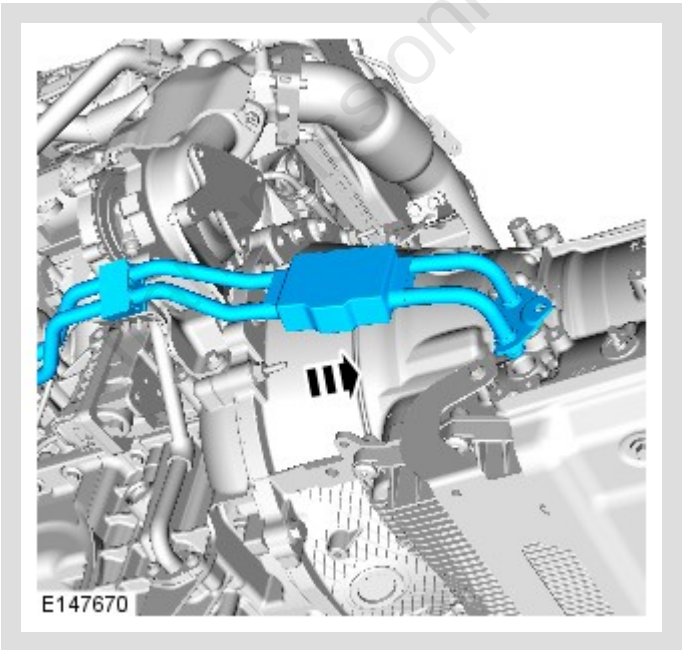

2.

CAUTION:

Install new o-ring seals

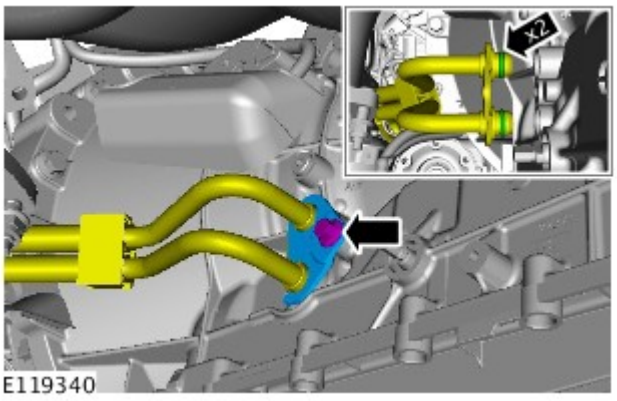

- *Torque:* **22 Nm**
- *Renew Part:* *Transmission casing O-ring seals* *Quantity:* *1* .

3.

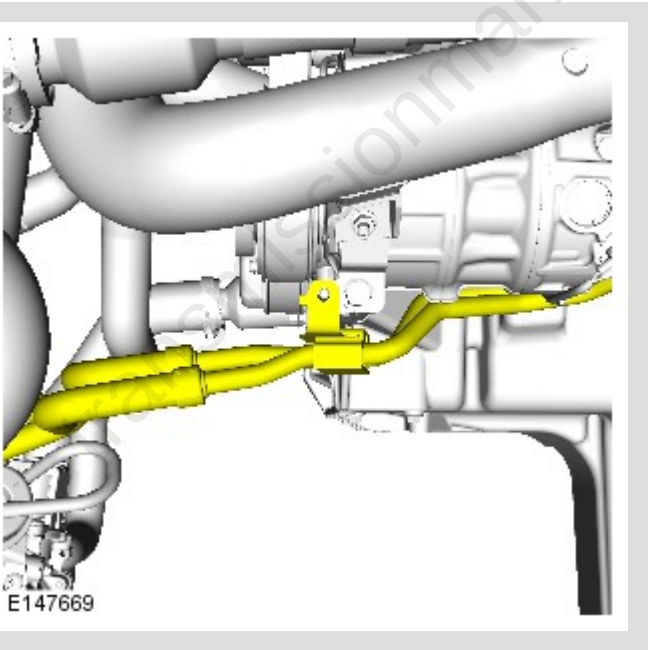

transmissionmanuals.com

4.

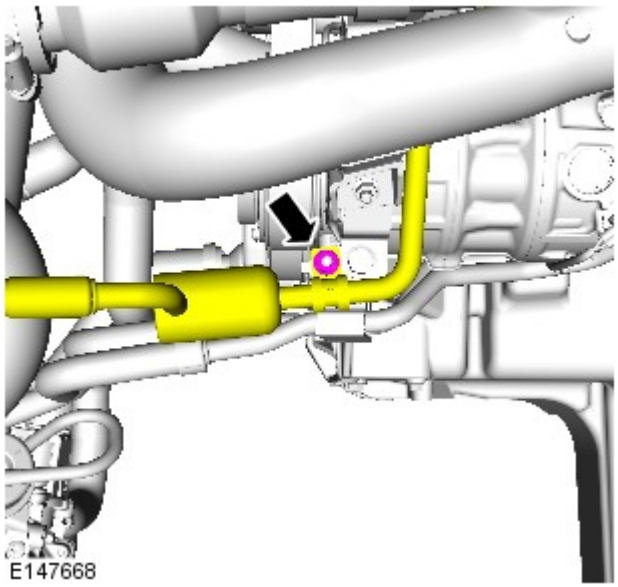

Torque: **9 Nm**

5.

NOTE:

Make sure that all the components are clean.

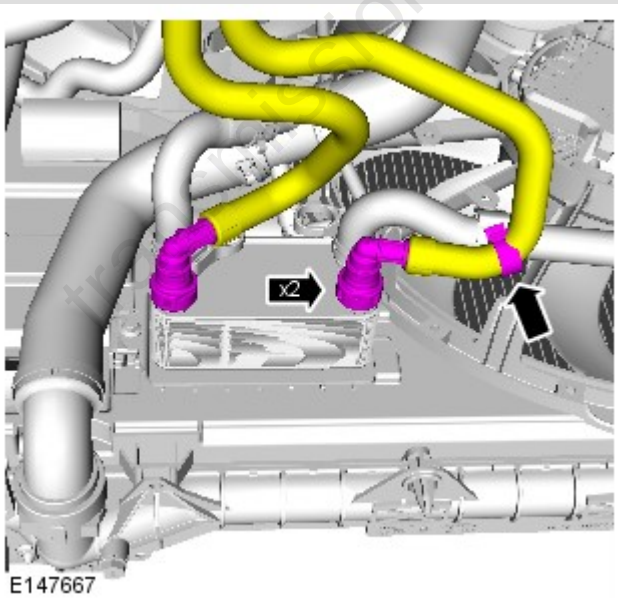

6. Install the front driveshaft.
Refer to: Front Driveshaft - TDV6 3.0L Diesel (205-01 Driveshaft, Removal and Installation).

7. Connect the battery ground cable.
Refer to: Specifications (414-00 Battery and Charging System - General Information, Specifications).

8. Check and top-up the transmission fluid level.
Refer to: Transmission Fluid Level Check (307-01 Automatic Transmission /Transaxle - Vehicles With: 8HP70 8-Speed Automatic Transmission AWD, General Procedures).

transmissionmanuals.com